SKG 3000

Gas Fired Humidifier

Patent

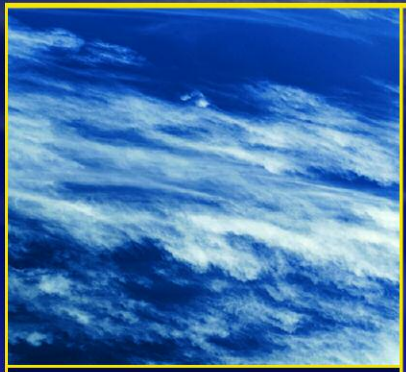

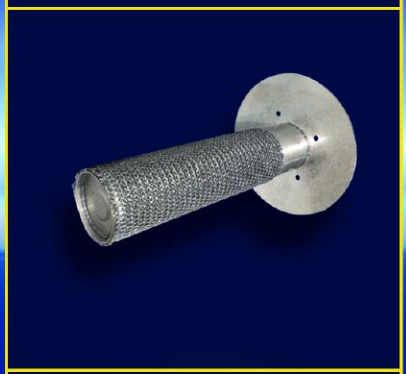

neptronic®

www.neptronic.com

SKG 3000

Gas Fired Humidifier

Patent

State of the Art

The ***SKG 3000*** uses the most advanced, commercially available gas technology ensuring consistent and efficient combustion. The same technology self-adjusts for altitude compensation and vent configuration (does not require an auxiliary power-venting blower).

The ***SKG 3000*** series of gas fired humidifiers (Natural or Propane gas) offers capacities from 110 lb/hr to 810 lb/hr (50 kg/hr to 369 kg/hr). The ***SKG 3000*** offers true modulation ranging from 10 lb/hr (4.5 kg/hr) to the maximum rated capacity of the humidifier, using 0-10vdc/2-10vcd or 4-20mA control signals.

With a combustion efficiency of 83% HHV (91% LHV), the ***SKG 3000*** offers one of the highest combustion efficiencies in the industry.

The attractive and innovative design of the ***SKG 3000*** requires as little as one third of the operational footprint of its competitors of equivalent capacity.

The ***SKG 3000*** uses either “Domestic”, “RO” or “DI” water and incorporates a proprietary (*patent*) automatic scale removal process for its heat exchanger.

When servicing is required the evaporation tank may be removed, cleaned and re-installed in 5 minutes without the need of special tools or costly replacement parts.

The ***SKG 3000*** uses a patented water level control system that allows energy conservation management of expensive boiling water and steam.

The ***SKG 3000*** has programmable automatic drain and maintenance cycles. The temperature of the drain water is tempered below 60ºC (140ºF) within the unit.

316 stainless steel is used for all components that come in contact with natural gas, flue gases or steam. The combustion chamber and heat exchanger are also 316 stainless steel.

Exceptional Reliability

Reliability of the ***SKG 3000*** humidifier is one of the features that sets it apart from competing humidifiers. Great care has been taken to select materials which have proven themselves for their exceptional performance in very harsh conditions. Such materials are of 316 stainless steel construction, teflon sleeved level control probe, silicon tubing (or equivalent) and powder coated steel cabinet. Selection of electro-mechanical and electronic components has been based on many years of experience and exhaustive testing. All ***SKG 3000*** units pass through rigorous Q.C. inspections and full power checks.

SKG 3000 DISPLAY

Ease of Communication

Remote communication with the ***SKG 3000*** humidifiers using BACnet allows for remote changing of variables such as set points, PID parameters and receiving comprehensive maintenance messages.

Modern Design and Advanced Technologies

Constructed with high quality materials and coupled with state of the art gas components, the ***SKG 3000*** provides trouble free operation. The wide modulation range makes the ***SKG 3000*** capable of maintaining set point humidity with minimal variation. Because of its design, the ***SKG 3000*** requires up to 3 times less footprint than its competition. The ***SKG 3000*** uses an innovative de-scaling process (*patent*) to prevent scale formation on the heat exchanger.

Ease of Maintenance

1. Disengage bandclamp
2. Disconnect the drain water connection
3. Lower the evaporation chamber
4. Remove chamber for scale cleaning

SKG 3000 Principle of Operation

On a call for humidity, the combustion air blower creates a negative pressure across the valve orifice located at the air inlet. The gas valve opens and the gas/air mixture is forced through the burner port and is ignited. Heat from the product of combustion is transferred to the water, by means of the heat exchanger, to produce steam and the products of combustion are vented out of the flue. The burner then begins to modulate based on demand.

SKG 3000 Overview

The ***SKG 3000*** humidifier consists of an automaticaly water fed stainless steel container with an easily removable evaporation reservoir allowing easy access to the heat exchanger for cleaning.

Periodic servicing of the unit can be easily done in minutes. Only the drain connection to the evaporation chamber must be undone to provide full access to the evaporation chamber and the heat exchanger.

The mechanical and electrical compartments are secured by wide doors allowing excellent access and serviceability to all components.

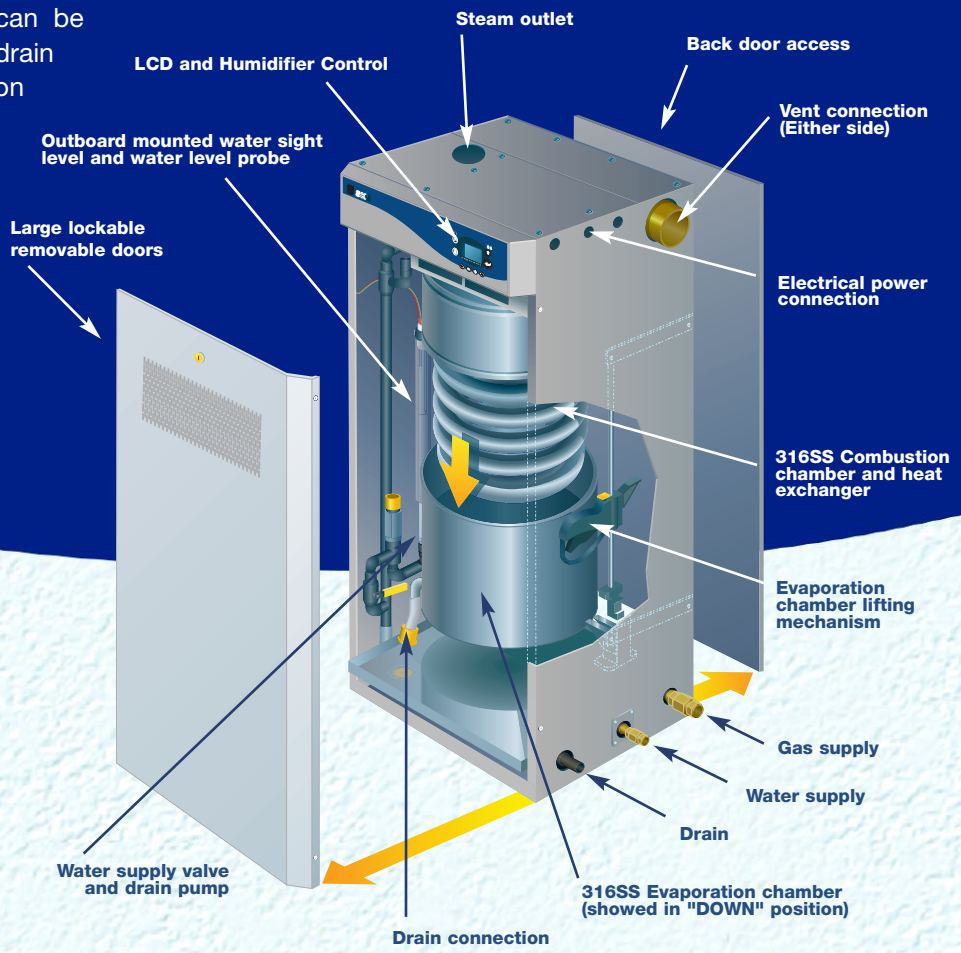

SKG 3000 *(Top View)* Gas Train / Controls

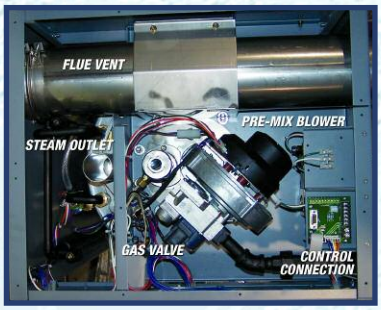

Operating Costs Between Gas Fired and Electric Powerd Humidifiers

It can be up to 5 times less expensive to use gas energy than electric power. ***SKG 3000*** could also be used where electric power is limited.

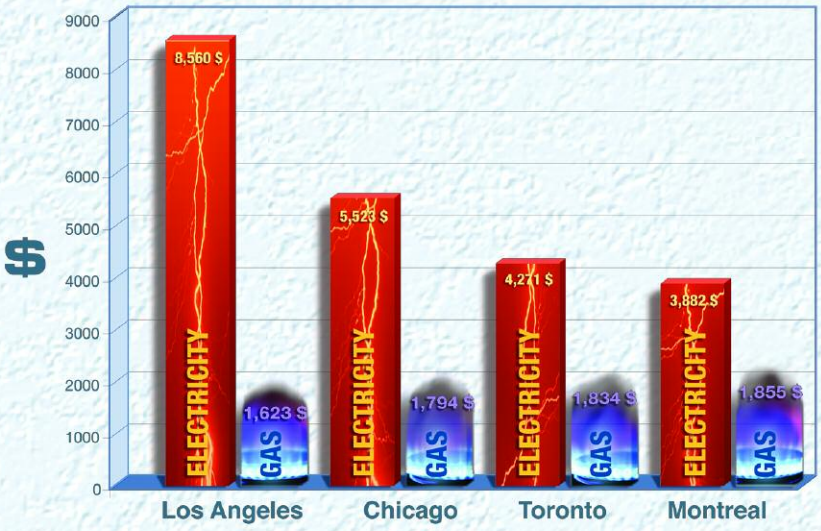

Based On

- Average retail electricity prices “Small Commercial”
- Natural gas “Market Prices”
- 100% full output for 1500 hours of operations
- Efficiency:
  Electric 98% - Gas 83%

Steam Absorption

In order to prevent the accumulation of condensation in air ducts, NEP has designed 2 basic configurations of steam distribution to provide the most economical solution for any particular application.

"Multi-Steam" System

The multi-steam system is to be installed in critical locations, particularly where absorption distances are very short (less than 3 feet) or low air duct temperatures are in effect.

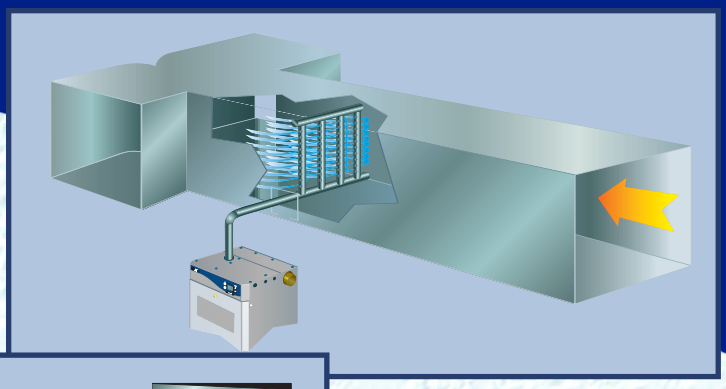

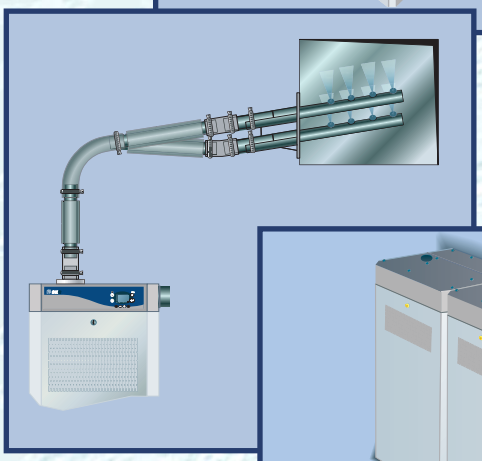

"S.A.M.E2" (steam absorption manifold)

The SAME2 is to be installed where absorption distances are short (less than 5 feet) and/or low duct temperatures are in effect.

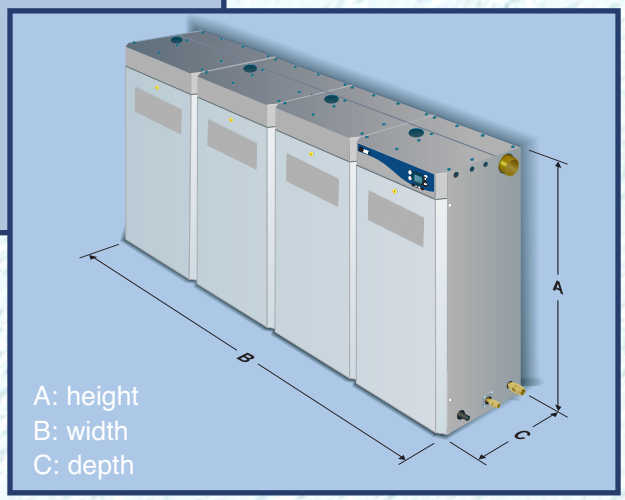

Technical Information

Model	Steam capacity		Power Consumption			Weight				Dimensions		
	lb/hr	kg/hr	Natural Gas Input		Electricity (120/1)	Empty		Water*		A Height	B Width	C Depth
			BTU/hr	kJ/h	Amps	lb	kg	lb	kg	in (cm)	in (cm)	in (cm)
SKG3-110-1	110	50	147,200	43	5.8	320	145	124	55	58 (147)	24 (61)	22 (56)
SKG3-155-1	155	70	177,400	52	5.8	320	145	124	55	58 (147)	24 (61)	22 (56)
SKG3-180-1	180	80	217,900	64	5.8	320	145	124	55	58 (147)	24 (61)	22 (56)
SKG3-210-1	210	95	273,200	80	5.8	320	145	124	55	58 (147)	24 (61)	22 (56)
SKG3-265-2	265	120	324,600	95	8.0	602	274	248	110	58 (147)	48 (122)	22 (56)
SKG3-310-2	310	141	354,800	104	8.0	602	274	248	110	58 (147)	48 (122)	22 (56)
SKG3-350-2	350	159	403,400	118	8.0	602	274	248	110	58 (147)	48 (122)	22 (56)
SKG3-405-2	405	184	527,200	155	8.0	602	274	248	110	58 (147)	48 (122)	22 (56)
SKG3-505-3	505	230	666,900	196	10.0	950	431	372	165	58 (147)	72 (183)	22 (56)
SKG3-560-3	560	254	704,500	207	10.0	950	431	372	165	58 (147)	72 (183)	22 (56)
SKG3-610-3	610	276	790,700	232	10.0	950	431	372	165	58 (147)	72 (183)	22 (56)
SKG3-710-4	710	322	930,500	273	12.0	1270	576	496	220	58 (147)	96 (244)	22 (56)
SKG3-765-4	765	346	968,100	284	12.0	1270	576	496	220	58 (147)	96 (244)	22 (56)
SKG3-810-4	810	369	1054,300	309	12.0	1270	576	496	220	58 (147)	96 (244)	22 (56)

*Add weight of empty unit to obtain total weight

NEP
Humidifiers

SKG 3000
GAS HUMIDIFIER

SKR
RESIDENTIAL
HUMIDIFIER

SK 300
ELECTRIC HUMIDIFIER

distributed by:

neptronic®

www.neptronic.com

Head Office
National Environmental Products Ltd.
400 Lebeau Blvd. Montréal, Québec H4N 1R6
Tel.: (514) 333-1433 Fax: (514) 333-3163 Toll Free(canada/usa): 1-800-361-2308

U.S. Office
NEP Inc.
1300 E. Hillsboro Blvd. Suite 200 Deerfield Beach, Florida 33441
Tel.: (954) 421-6216 Fax: (954) 421-8785